ClearAccent

RS060B LED5-36-/840 PSR II WH

36 ° - 840 neutral white - Power supply unit regulating - Safety class II - White

ClearAccent is an entry-level recessed spot range designed to replace halogen-based luminaires. Its attractive price and high lumen per watt ratio make the decision to switch to LED an easy one. The luminaire's compact design, with built-in driver, is suitable for a wide variety of applications. The dimensions of the fixation hole meet the old halogen-based standard of 68 mm, which makes retrofitting possible. Thanks to the screw-in connectors, installation is easy and safe.

Product data

General Information	
Beam angle of light source	36 °
Light source color	840 neutral white
Cap-Base	- [-]
Light source replaceable	No
Number of gear units	-
Gear	-
Driver/power unit/transformer	Power supply unit regulating
Driver included	Yes
Optic type	Symmetrical
Optical cover/lens type	Clear flat
Luminaire light beam spread	36°
Control interface	Analog
Connection	Screw connection block 3-pole
Cable	-
Protection class IEC	Safety class II
Glow-wire test	Temperature 650 °C, duration 30 s

Flammability mark	-
CE mark	CE mark
ENEC mark	-
UL mark	-
Warranty period	3 years
Remarks	*-Per Lighting Europe guidance paper "Evaluating performance of LED based luminaires - January 2018": statistically there is no relevant difference in lumen maintenance between B50 and for example B10. Therefore the median useful life (B50) value also represents the B10 value.
Constant light output	No
Number of products on MCB of 16 A type B	48
RoHS mark	-

ClearAccent

Operating and Electrical	
Input Voltage	220-240 V
Input Frequency	50 to 60 Hz
Control signal voltage	-
Inrush current	2 A
Inrush time	82 ms
Power Factor (Min)	0.9

Controls and Dimming	
Dimmable	Yes

Mechanical and Housing	
Housing Material	Aluminum die cast
Reflector material	Polycarbonate aluminum coated
Optic material	Polycarbonate
Optical cover/lens material	Polycarbonate
Fixation material	-
Optical cover/lens finish	Clear
Overall height	55 mm
Overall diameter	75 mm
Color	White

Approval and Application	
Ingress protection code	IP20 [Finger-protected]
Mech. impact protection code	IK02 [0.2 J standard]

Initial Performance (IEC Compliant)	
Initial luminous flux (system flux)	500 lm
Luminous flux tolerance	+/-10%
Initial LED luminaire efficacy	83 lm/W
Init. Corr. Color Temperature	4000 K
Init. Color Rendering Index	≥80
Initial chromaticity	(0.38, 0.38) SDCM <3
Initial input power	6 W
Power consumption tolerance	+/-10%

Over Time Performance (IEC Compliant)	
Control gear failure rate at median useful life 50000 h	7.5 %
Lumen maintenance at median useful life* 50000 h	L65

Application Conditions	
Ambient temperature range	0 to +40 °C
Performance ambient temperature Tq	25 °C
Maximum dim level	10% (depends on dimmer, ELV)
Suitable for random switching	No

Product Data	
Full product code	871869607268499
Order product name	RS060B LED5-36-/840 PSR II WH
EAN/UPC - Product	8718696072684
Order code	910503910183
Numerator - Quantity Per Pack	1
Numerator - Packs per outer box	24
Material Nr. (12NC)	910503910183
Net Weight (Piece)	0.100 kg

Dimensional drawing

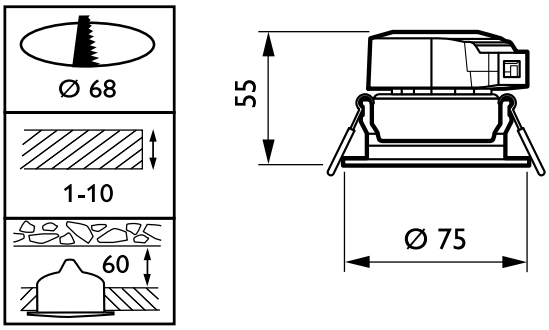

ClearAccent RS060B/RS061B

ClearAccent

Photometric data

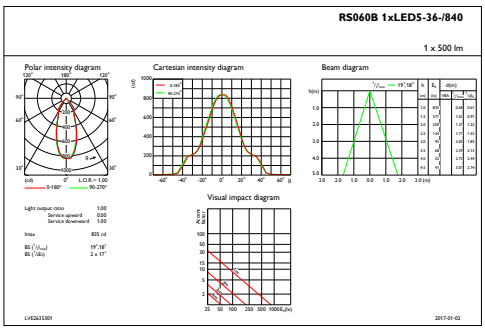

IFAS1_RS060B1xLED5-36-840

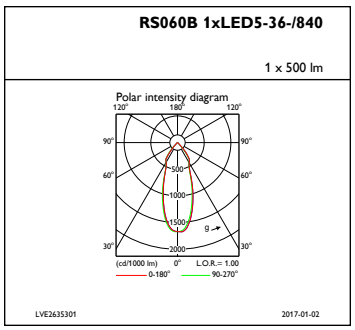

IFPC1_RS060B1xLED5-36-840

© 2019 Signify Holding All rights reserved. Signify does not give any representation or warranty as to the accuracy or completeness of the information included herein and shall not be liable for any action in reliance thereon. The information presented in this document is not intended as any commercial offer and does not form part of any quotation or contract, unless otherwise agreed by Signify. Philips and the Philips Shield Emblem are registered trademarks of Koninklijke Philips N.V.